A10P4YA1

Released by HIWIN design group.

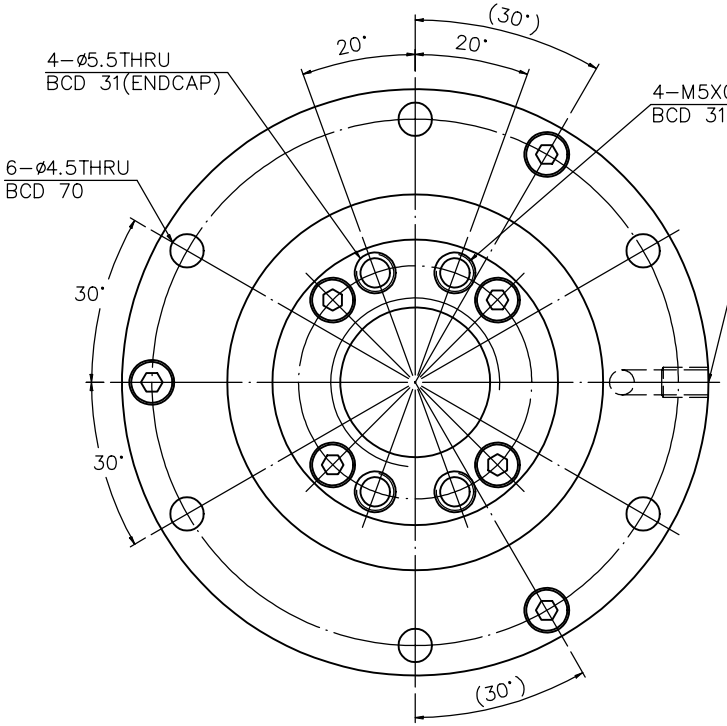

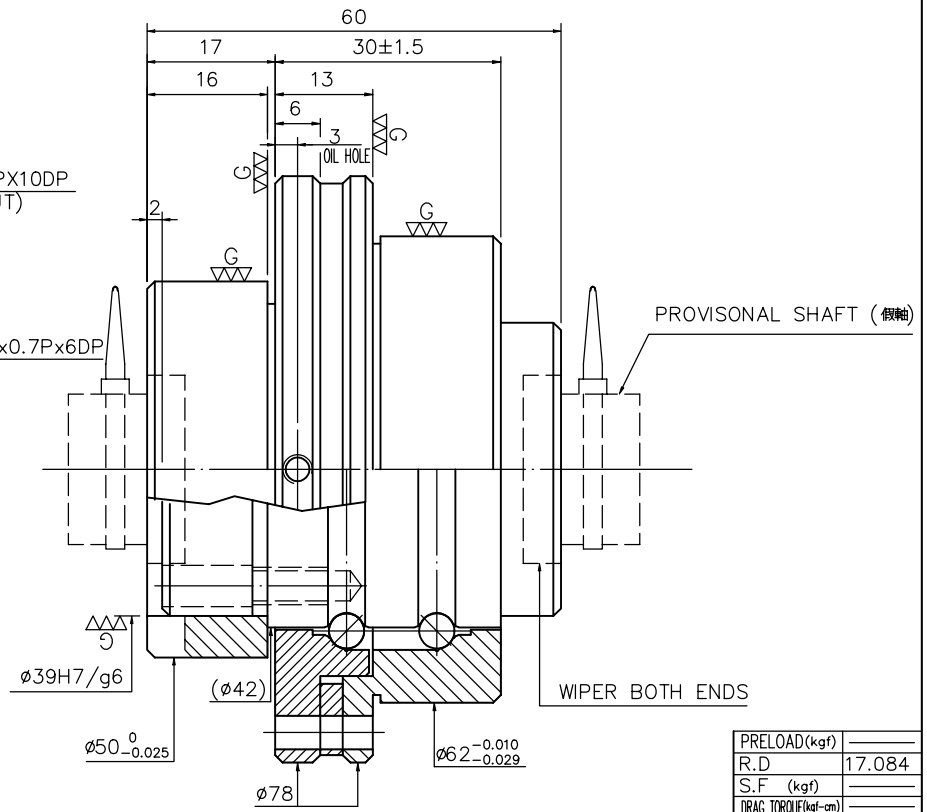

SPEC: R20-20S2-DFSHR1

MAX. AXIAL LOAD(kgf)		LUBRCATION		PRELOAD(kgf)	—
MAX. ROTATIONAL SPEED(rpm)		SPACE BALL		R.D	17.084
DN VALUE		EI TYPE ASSEMBLY METHOD		S.F (kgf)	—
MAX. FEED RATE(m/min)		CUSTOMER DRAWING NO.		DRAG TORQUE(kgf-cm)	—
ACCELERATION(m/sec²)		CUSTOMER MC TYPE		DIRECTION OF TURN	R.H
SUPPORT METHOD		CUSTOMER AXIAL TYPE		PC DIA.	20.36
				BALL DIA.	3.175
				BACKLASH	—
				CIRCUIT	1.8*2
				LEAD ANGLE	17.36
				DYNAMIC (kgf)	—
				STATIC (kgf)	—
				LEAD	20.

THREAD LENGTH

T: —— e300: ——

E: —— e: ——

UNCHAMFERED USE □R0.5 ■R1 □R

ROUGH M/C	FIN M/C	GRD	SCALE
25a	6.3a	0.4a	1: X

UNTOL DIMN mm

UP TO 6	6 30	30 120	120 300	300 600	600 1200	1200 2400	OVER 2400
±0.1	±0.2	±0.3	±0.4	±0.5	±0.8	±1.0	±1.5

HIWIN® BALLSCREWS

MATAL	SH: 50CrMo4	DATE	2003.04.10
	NT: SNCM220	DWG	巫閩馨
THREAD BALL TRACK HRC 58 ~ 62		APPD	
		PROCESS NO.	G
CUSTR			
DWG.NO.	A10P4YA1		

*BREAK SHARP EDGE UNLESS OTHER SPECIFIED.
*未畫倒角者以R0.5MAX

THREAD END ALLOWS ABOVE LENGTH OUT OF HARDNESS TOLERANCE

DATE	MODIFICATION	APPROVED

* PLEASE IGNORE CHINESE CHARACTERS WHICH ARE FOR OUR REFERENCE ONLY.