A10QN0A3 | Released by HIWIN design group.

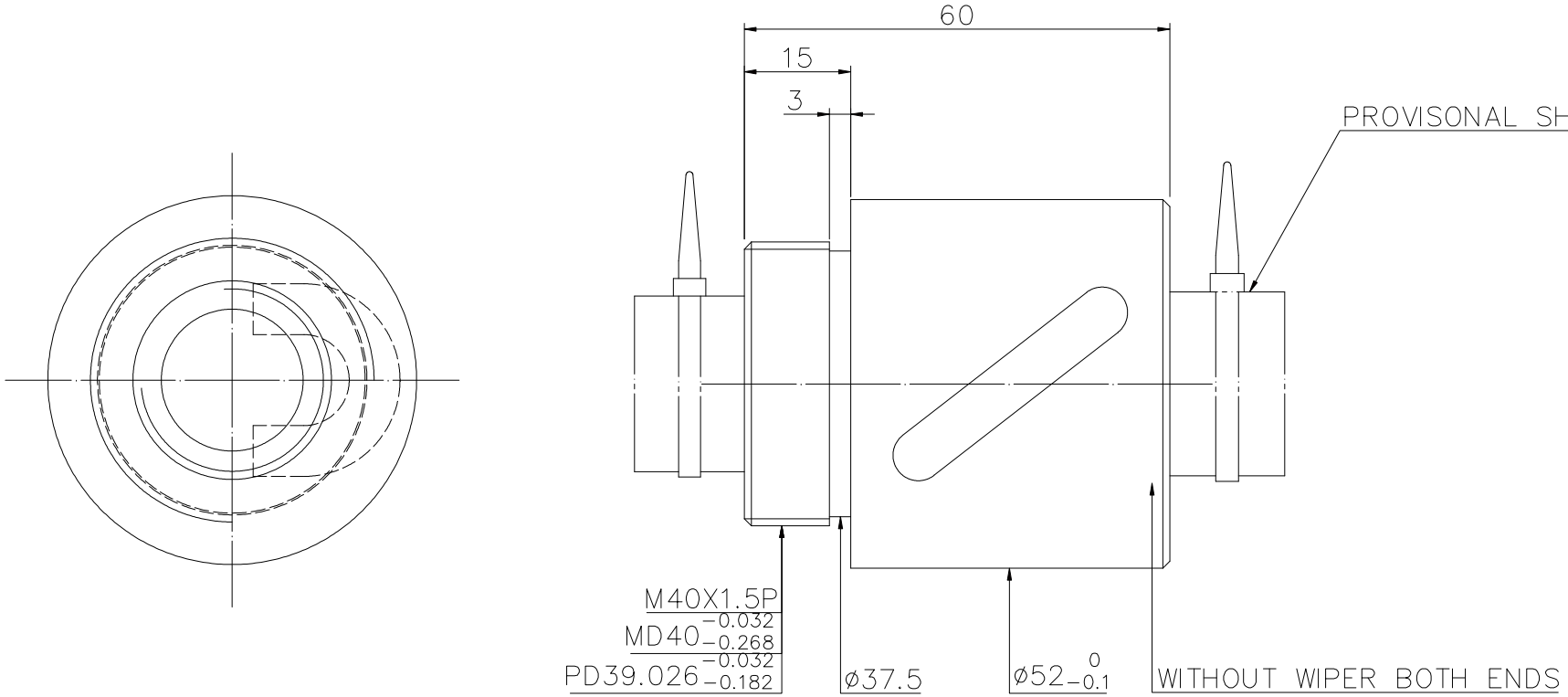

SPEC: R20-10B1-RSB

MAX. AXIAL LOAD(kgf)		LUBRICATION		PRELOAD(kgf)	~
MAX. ROTATIONAL SPEED (rpm)		SPACE BALL		R.D.	~
DN VALUE		E1 TYPE ASSEMBLY METHOD		S.F. (kgf)	
MAX. FEED RATE(m/min)		CUSTOMER DRAWING NO.	X721-001	DRAG TORQUE(kgf-cm)	
ACCELERATION(m/sec²)		CUSTOMER MC TYPE		DIRECTION OF TURN	R
SUPPORT METHOD		CUSTOMER AXIAL TYPE		P.C. DIA.	20.85
				BALL DIA.	4.763
				BACKLASH	~
				CIRCUIT	2.5*1
				LEAD ANGLE	8.68
				DYNAMIC (kgf)	~
				STATIC (kgf)	~
				LEAD	10

THREAD LENGTH

e300: ~

E: ~

UNCHAMFERED USE ☐R0.5 ■R1 ☐R

ROUGH M/C	FIN M/C	GRD	SCALE
25a	6.3a	0.4a	1:X

NORMAL TOLERANCE mm

UP TO 6	6 30	30 120	120 300	300 600	600 1200	1200 2400	OVER 2400
±0.1	±0.2	±0.3	±0.4	±0.5	±0.8	±1.0	±1.5

HIWIN® BALLSCREWS

MAT.	SH: ROLLED	DATE	2008.08.15
	NT: SNCM220	DWG	Sting
THREAD BALL TRACK HRC 56 ~~ 62		APPD	Lady
		PROCESS NO.	G
CUSTR			
DWG.NO.	A10QN0A3		

*BREAK SHARP EDGE UNLESS OTHER SPECIFIED.
*未畫倒角者以R0.5MAX

THREAD END ALLOWS ABOVE LENGTH OUT OF HARDNESS TOLERANCE

DATE	MODIFICATION	APPROVED
2008.08.15	MOD. 1	Lady

* PLEASE IGNORE CHINESE CHARACTERS WHICH ARE FOR OUR REFERENCE ONLY.