A114ABA3 | Released by HIWIN design group.

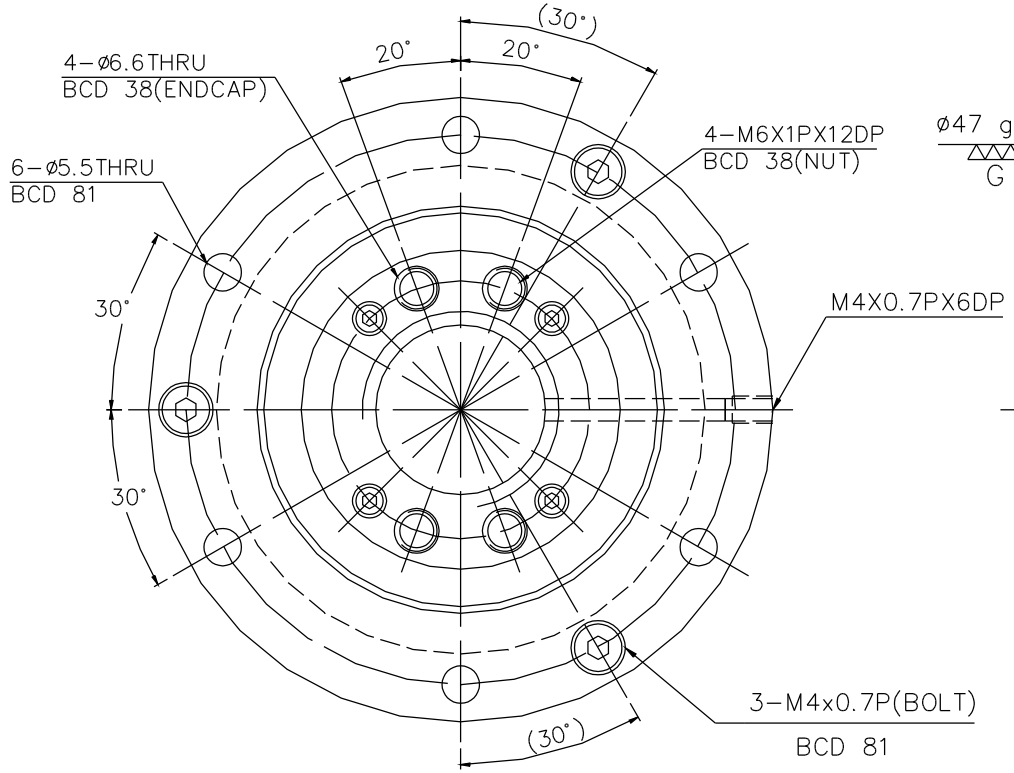

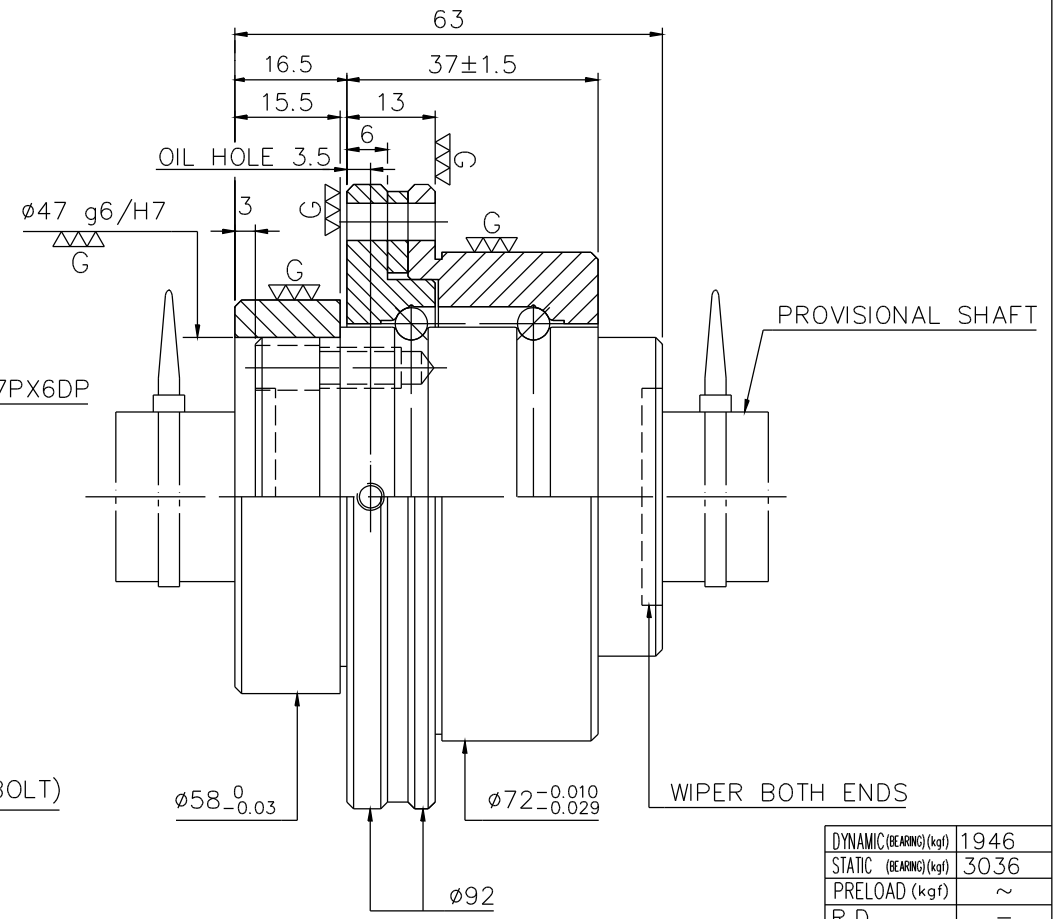

SPEC: 4R25-25S2-DFSHR1

MAX. AXIAL LOAD(kgf)		LUBRICATION		DYNAMIC(BEARING)(kgf)	1946
MAX. ROTATIONAL SPEED(rpm)		SPACE BALL		STATIC (BEARING)(kgf)	3036
DN VALUE		E1 TYPE ASSEMBLY METHOD		PRELOAD (kgf)	~
MAX. FEED RATE(m/min)		CUSTOMER DRAWING NO.		R.D	–
ACCELERATION(m/sec²)		CUSTOMER MC TYPE	△1	S.F (kgf)	
SUPPORT METHOD		CUSTOMER AXIAL TYPE	△2	DRAG TORQUE(kgf-cm)	
				DIRECTION OF TURN	R
				PC DIA.	26.03
				BALL DIA.	3.969
				BACKLASH	–
				CIRCUIT	1.8*2
				LEAD ANGLE	17
				DYNAMIC (kgf)	1208
				STATIC (kgf)	2799
				LEAD /PITCH	25/12.5

THREAD LENGTH

E300: –

UNCHAMFERED USE ☐R0.5 ■R1 ☐R

ROUGH M/C	FIN M/C	GRD	SCALE
25a	6.3a	0.4a	1: X

UNTOL DIMN mm

UP TO 6	6 30	30 120	120 300	300 600	600 1200	1200 2400	OVER 2400
±0.1	±0.2	±0.3	±0.4	±0.5	±0.8	±1.0	±1.5

HIWIN® BALLSCREWS

MATAL	SH: ROLLED	DATE	2007.05.31
	NT: SNCM220/SCM415	DWG	Dan
THREAD BALL TRACK HRC 56 ~~ 62		APPD	Michelle
		PROCESS NO.	G
CUSTR			
DWG.NO.	A114ABA3		

*BREAK SHARP EDGE UNLESS OTHER SPECIFIED.
*??????R0.5MAX

THREAD END ALLOWS ABOVE LENGTH OUT OF HARDNESS TOLERANCE

DATE	MODIFICATION	APPROVED
2007.05.31	MOD. △1~△3	Michelle

* PLEASE IGNORE CHINESE CHARACTERS WHICH ARE FOR OUR REFERENCE ONLY.