A114ACA4

Released by HIWIN design group.

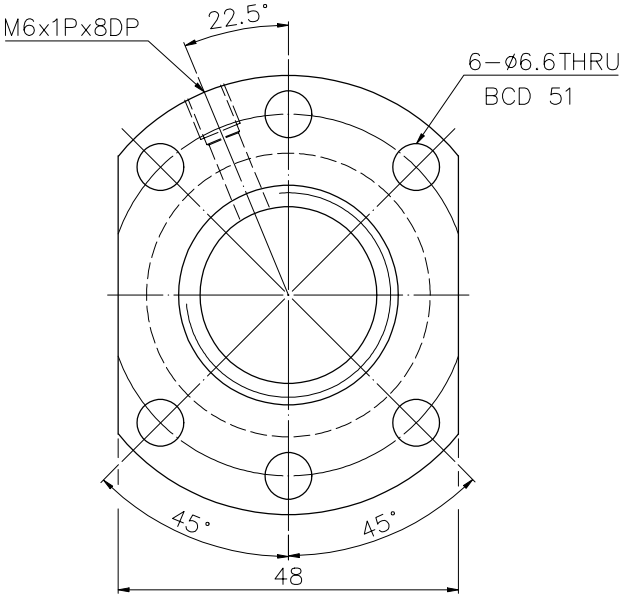

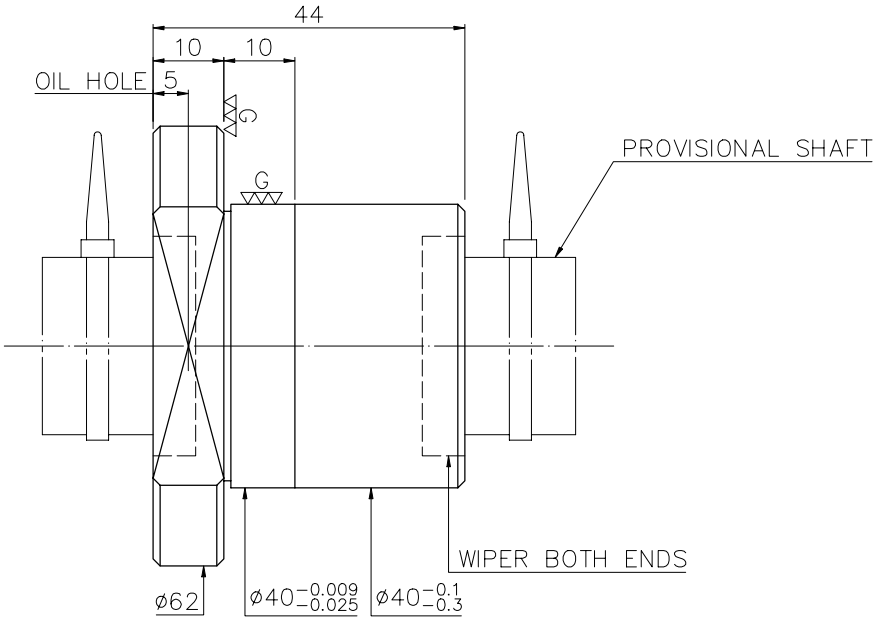

SPEC:R25-5T3-FSI

MAX. AXIAL LOAD(kgf)		LUBRICATION		BALL DIA.	3.175
MAX. ROTATIONAL SPEED (rpm)		SPACE BALL		BACKLASH ⚠	
DN VALUE		E1 TYPE ASSEMBLY METHOD		CIRCUIT	3
MAX. FEED RATE(m/min)		CUSTOMER DRAWING NO.		LEAD ANGLE	3.56
ACCELERATION(m/sec²)		CUSTOMER MC TYPE		DYNAMIC (kgf)	880
SUPPORT METHOD		CUSTOMER AXIAL TYPE		STATIC (kgf)	2082
				LEAD	5

PRELOAD(kgf)	~
R.D	~
S.F (kgf)	
DRAG TORQUE(kgf-cm)	
DIRECTION OF TURN	R
PC DIA.	25.57

THREAD LENGTH

E300: ~

UNCHAMFERED USE ☐R0.5 ■R1 ☐R

ROUGH M/C	FIN M/C	GRD
25a	6.3a	0.4a

SCALE 1:X

UNTOL DIMN mm

UP TO 6	6 30	30 120	120 300	300 600	600 1200	1200 2400	OVER 2400
±0.1	±0.2	±0.3	±0.4	±0.5	±0.8	±1.0	±1.5

MATAL	SH: ROLLED	DATE	2007.07.16
	NT: SNCM220/SCM415	DWG	JANET
THREAD BALL TRACK		APPD	MICHELLE
HRC 56 ~ 62		PROCESS NO.	G
CUSTR			
DWG.NO.	A114ACA4		

HIWIN® BALLSCREWS

*BREAK SHARP EDGE UNLESS OTHER SPECIFIED.
*未畫倒角者以R0.5MAX

THREAD END ALLOWS ABOVE LENGTH OUT OF HARDNESS TOLERANCE

DATE	MODIFICATION	APPROVED
2007.07.16	MOD.⚠	MICHELLE

* PLEASE IGNORE CHINESE CHARACTERS WHICH ARE FOR OUR REFERENCE ONLY.