A11456A2 | Released by HIWIN design group.

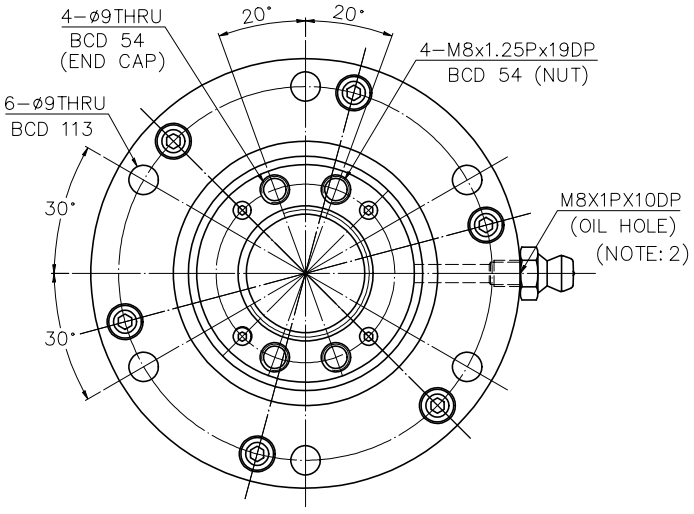

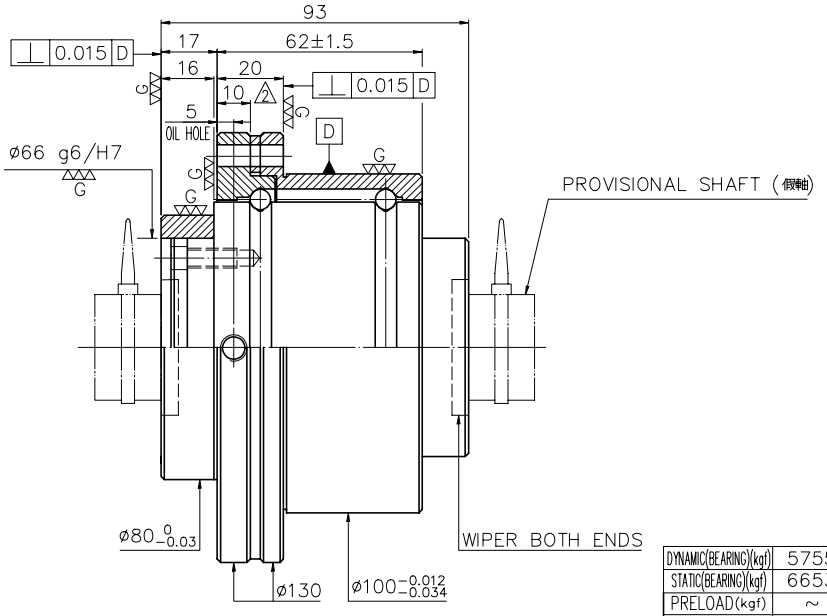

SPEC: 4R36-36S2-DFSHR1

DYNAMIC(BEARING)(kgf)	5755				
STATIC(BEARING)(kgf)	6653				
PRELOAD(kgf)	~				
R.D	~				
S.F (kgf)	~				
DRAG TORQUE(kgf-cm)	~				
DIRECTION OF TURN	R				
PC DIA.	36.275				
BALL DIA.	4.763				
BACKLASH	~				
CIRCUIT	1.8*2				
LEAD ANGLE	17.53				
DYNAMIC (kgf)	~				
STATIC (kgf)	~				
LEAD/PITCH	36/18				

MAX. AXIAL LOAD(kgf)		LUBRICATION	
MAX. ROTATIONAL SPEED (rpm)		SPACE BALL	
DN VALUE		E1 TYPE ASSEMBLY METHOD	
MAX. FEED RATE(m/min)		CUSTOMER DRAWING NO.	
ACCELERATION(m/sec²)		CUSTOMER MC TYPE	
SUPPORT METHOD		CUSTOMER AXIAL TYPE	

⚠1 NOTE: 1. Steel ball tolerance must be in the range of −0.0025, −0.015
(鋼珠公差限用−0.0025, −0.015)
2. WITH NIPPLE

THREAD LENGTH
E300: ~

UNCHAMFERED USE ☐R0.5 ■R1 ☐R

ROUGH M/C	FIN M/C	GRD	SCALE
25a	6.3a	0.4a	1:X

UNTOL DIMN mm

UP TO 6	6 30	30 120	120 300	300 600	600 1200	1200 2400	OVER 2400
±0.1	±0.2	±0.3	±0.4	±0.5	±0.8	±1.0	±1.5

MATAL	SH: ROLLED	DATE	2008.06.09
	NT: SNCM220/SCM415	DWG	Sigma
THREAD BALL TRACK HRC 56 ~ 62		APPD	Michelle
		PROCESS NO.	G
CUSTR	H-CHICAGO		
DWG.NO.	A11456A2		

HIWIN® BALLSCREWS

*BREAK SHARP EDGE UNLESS OTHER SPECIFIED.
*未畫倒角者以R0.5MAX

◐ THREAD END ALLOWS ABOVE LENGTH OUT OF HARDNESS TOLERANCE

DATE	MODIFICATION	APPROVED
2008.06.09	MOD. ⚠1~⚠2	Michelle

* PLEASE IGNORE CHINESE CHARACTERS WHICH ARE FOR OUR REFERENCE ONLY.