A114XAA3 | Released by HIWIN design group.

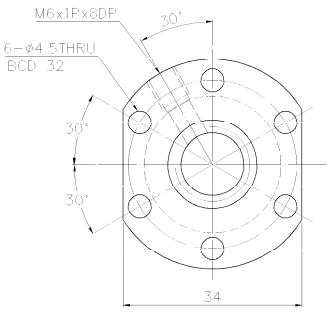

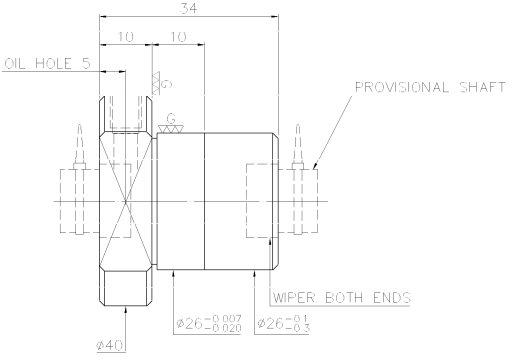

NOTE: 1.Steel ball tolerance must be in the range of −0.0025 , −0.015

SPEC: R12−5T3−FSI

MAX. AXIAL LOAD (kgf)		LUBRICATION	
MAX. ROTATIONAL SPEED (rpm)		SPACE BALL	
DN VALUE		E1 TYPE ASSEMBLY MEMBER	
MAX. FEED RATE (m/min)		CUSTOMER DRAWING NO.	
ACCELERATION (m/sec²)		CUSTOMER MC TYPE	
SUPPORT METHOD		CUSTOMER AXIAL TYPE	

PRELOAD (kgf)	~
R.D	~
S.F (kgf)	
FRAG TORQUE (kgf-cm)	
DIRECTION OF TURN	R
PC DIA	12.01
BALL DIA	2
BACKLASH △1	0.03MAX
CIRCUIT	3
LEAD ANGLE	7.55
DYNAMIC (kgf)	265
STATIC (kgf)	461
LEAD	5

THREAD LENGTH

E300 ~

UNCHAMFERED USE □R0.5 ■R1 □R

SYMBOL	MAX. FIN. M/C	GRD.	SCALE
25.0	6.3	0.4	1 : X

UNTOL DIMN mm

DP	6	30	120	500	600	1200	OVER
±0.1	±0.2	±0.3	±0.4	±0.5	±0.6	±1.0	±1.5

MATAL	SH. ROLLED	DATE	2007.07.16
	NT: SNCM220/SCM415	DWG	JANET
THREAD BALL TRACK	HRC 56 ~ 62	APPD	MICHELLE
		PROCESS NO.	G
CUSTR	H−CHICAGO		
DWG.NO.	A114XAA3		

HIWIN® BALLSCREWS

DATE	MODIFICATION	APPROVED
2007.07.16	MOD △1	MICHELLE

* BREAK SHARP EDGE UNLESS OTHER SPECIFIED
* 未畫倒角者以 R0.5MAX

THREAD END ALLOWS ABOVE LENGTH OUT OF HARDNESS TOLERANCE

* PLEASE IGNORE CHINESE CHARACTERS WHICH ARE FOR OUR REFERENCE ONLY.