7L0002A3

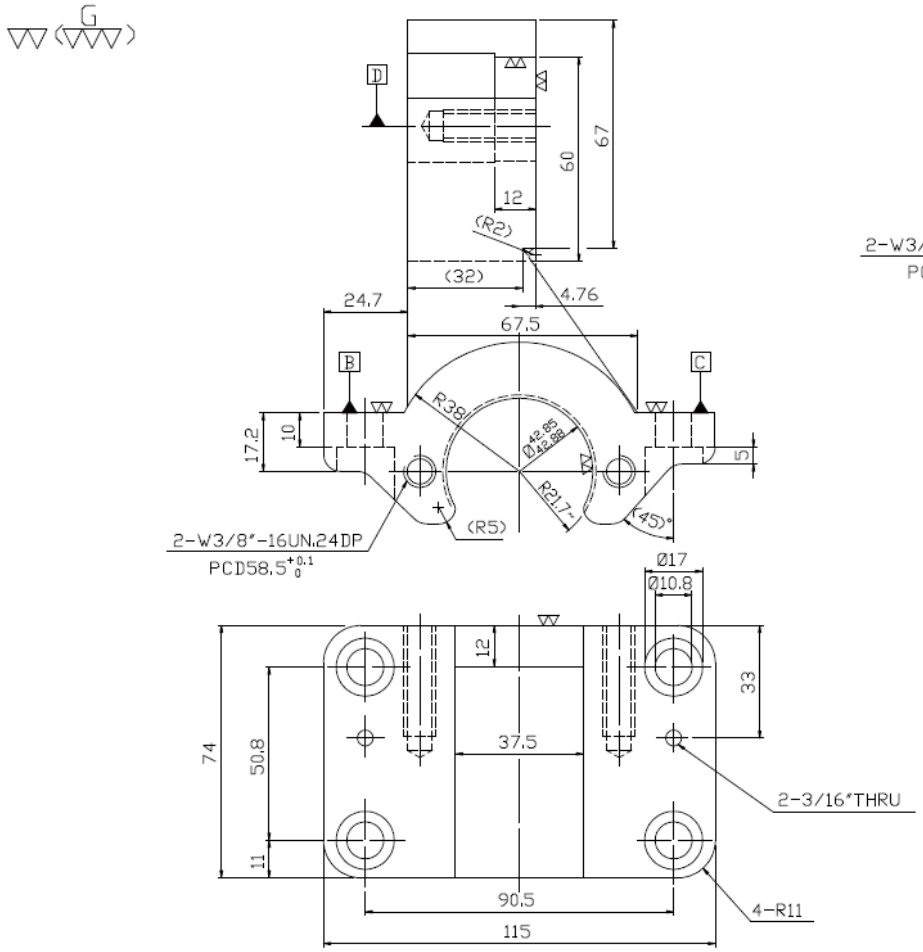

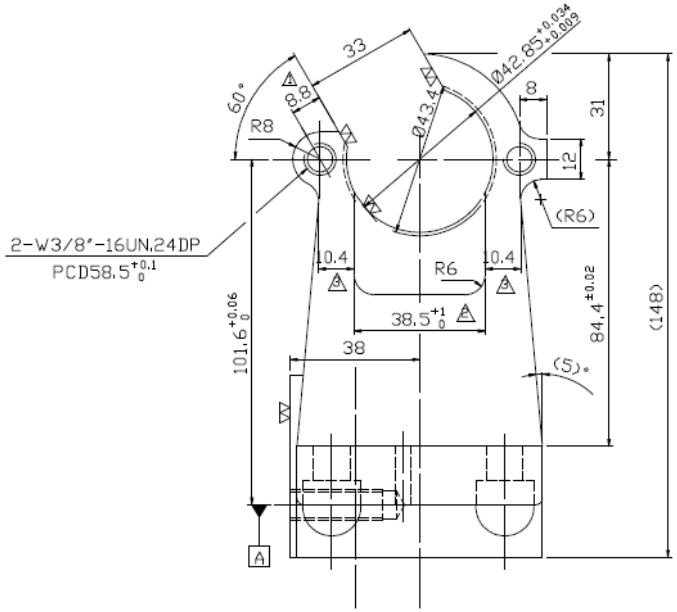

																	07.19.'00.
07.18.'00																	

□C0.5 ■C1 □C

25a 6.3a 0.4a 1:X

mm

UP TO	6	30	120	300	600	1200	2400	OVER 2400
±0.1	±0.2	±0.3	±0.4	±0.5	±0.8	±1.0	±1.5	

FC25 HRC—

7L0002A3

HIWIN® BALLSCREWS