A100B6A2 | Released by HIWIN design group.

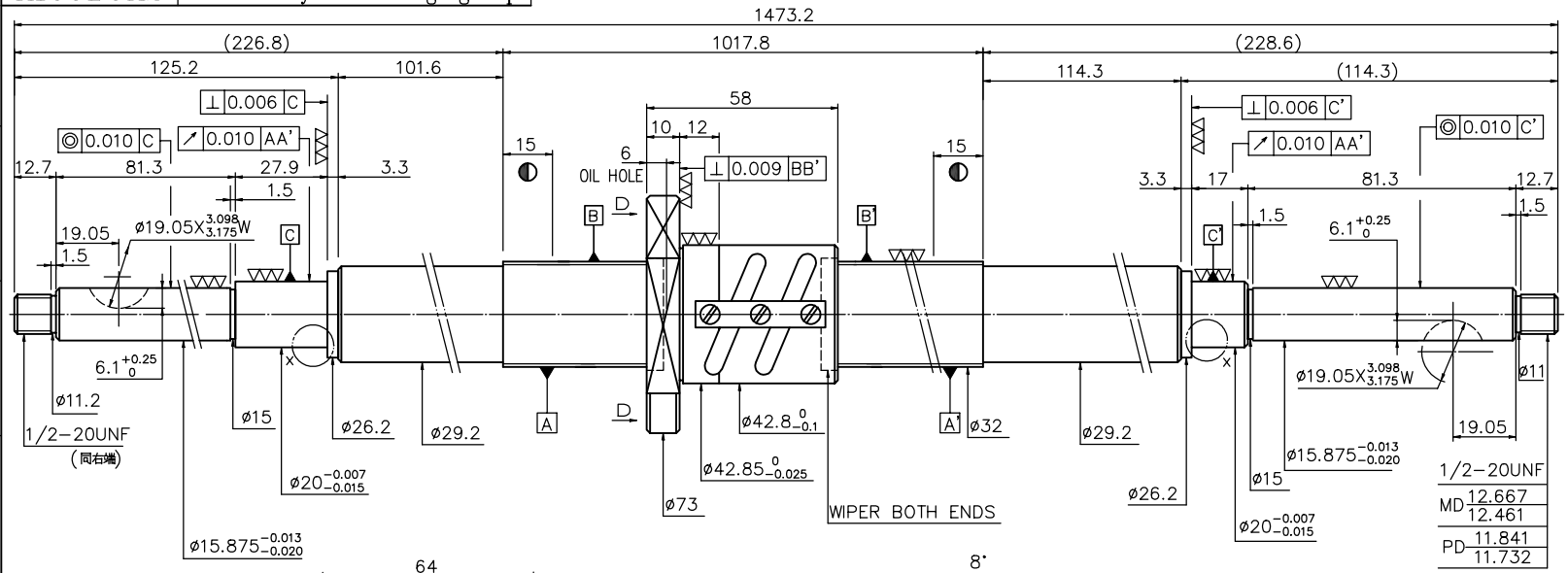

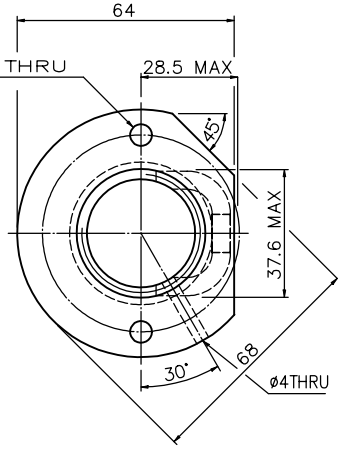

D-D VIEW

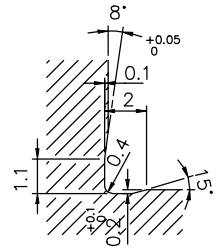

F0.4X0.2DIN509

X DETAIL

SPEC: R32-5.08B2-FSV-1017.8-1473.2-0.012

*BREAK SHARP EDGE UNLESS OTHER SPECIFIED
*未畫倒角者去毛邊

	PRELOAD(kgf)	207
	R.D	29.324
4 1	S.F (kgf)	0.79~1.77
3	DRAG TORQUE(kgf-cm)	2.3~5.2
	LUBRICATION	OIL
	DIRECTION OF TURN	R.H
	PC DIA.	32.6
	BALL DIA.	3.175
	BALL TRACK FORM	GOTHIC
2	BACKLASH	0
	CIRCUIT	2.5*2
	LEAD ANGLE	2.84°
	DYNAMIC (kgf)	1876
	STATIC (kgf)	5707
	LEAD	5.08

REVISION	DATE	MODIFICATION	APPROVED
2	05.18.93	CHANGE FRAME	
1	74.08.31	A ISSUE 1st REVISION	

* PLEASE IGNORE CHINESE CHARACTERS WHICH ARE FOR OUR REFERENCE ONLY.

CUSTOMER DRAWING NO.
MC TYPE 48"
AXIAL TYPE

THREAD LENGTH
T:-0.031 e300: 0.012
E:0.024 e: 0.019

UNCHAMFERED USE ☐C0.5 ■C1 ☐C
ROUGH M/C 25a FIN M/C 6.3a GRD 0.4a
SCALE 1: X
UNTOL DIMN mm

UP TO 6	6 30	30 120	120 300	300 600	600 1200	1200 2400	OVER 2400
±0.1	±0.2	±0.3	±0.4	±0.5	±0.8	±1.0	±1.5

THREAD BALL TRACK HRC 58 ~ 62
THREAD END ALLOWS ABOVE LENGTH OUT OF HARDNESS TOLERANCE

CUSTR	H-USA	DATE	01.04.'99
TITLE	BALL SCREW	DWG	双鶴馨
MATAL	SH: 50CrMo4 NT: SNCM220	CHK	
		APPD	
DWG.NO.	A100B6A2	PROCESS NO.	E

HIWIN® BALLSCREWS