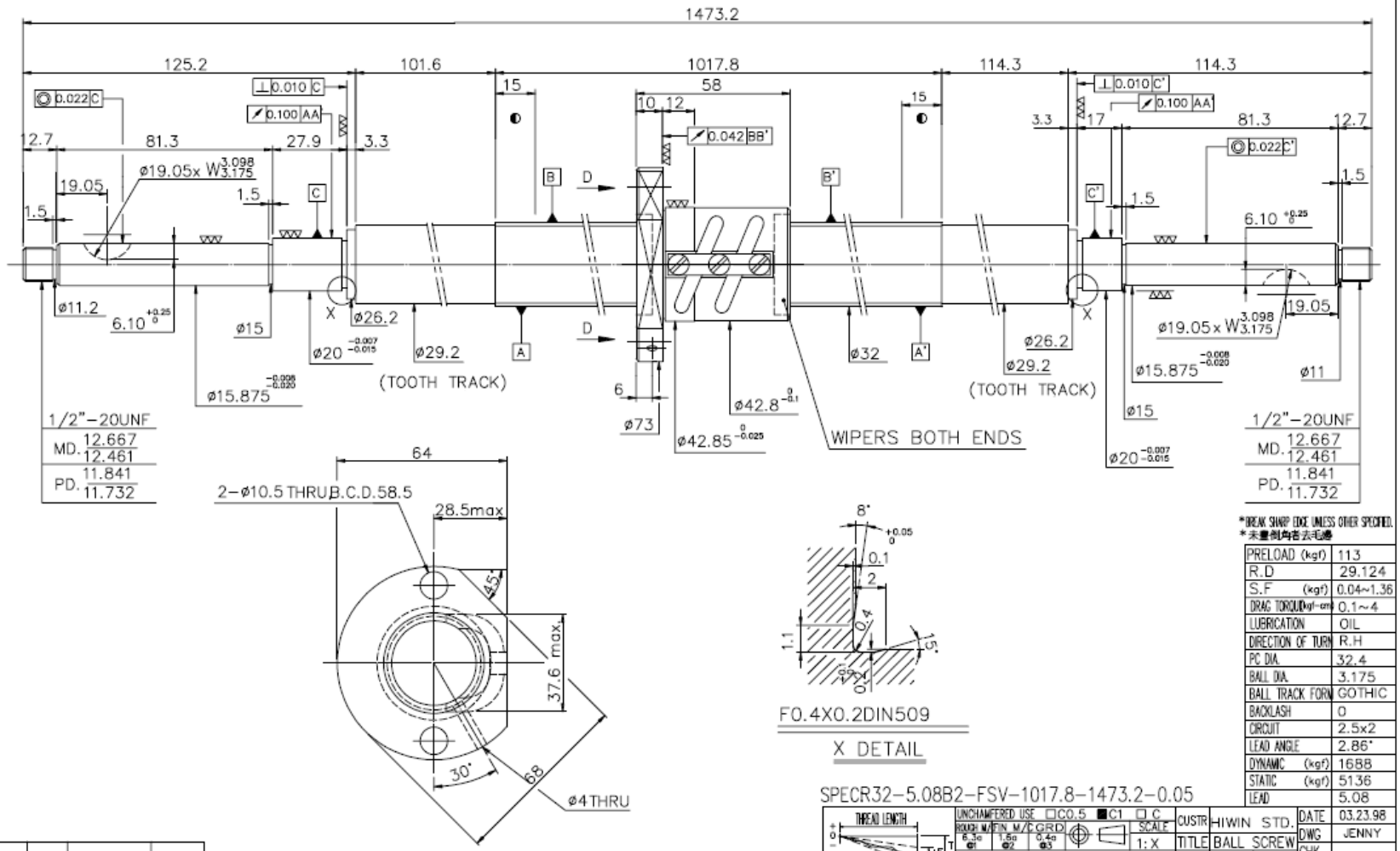

*BREAK SHARP EDGE UNLESS OTHER SPECIFIED.
*未畫倒角者去毛邊

PRELOAD (kgf)	113
R.D	29.124
S.F (kgf)	0.04~1.36
DRAG TORQUE (kgf-cm)	0.1~4
LUBRICATION	OIL
DIRECTION OF TURN	R.H
PC DIA.	32.4
BALL DIA.	3.175
BALL TRACK FORM	GOTHIC
BACKLASH	0
CIRCUIT	2.5x2
LEAD ANGLE	2.86°
DYNAMIC (kgf)	1688
STATIC (kgf)	5136
LEAD	5.08

SPECR32-5.08B2-FSV-1017.8-1473.2-0.05

REVISION	DATE	MODIFICATION	APPROVED
—	03.23.98	CHANGE FRAME	
1	8.24.'95	A ISSUE 1st REVISION	

* PLEASE IGNORE CHINESE CHARACTERS WHICH ARE FOR OUR REFERENCE ONLY.

CUSTOMER DRAWING NO.	
MC TYPE	48"
ROTAL TYPE	X
ITEM NO	

THREAD LENGTH

E3000.05

UNCHAMFERED USE □C0.5 ■C1 □C
ROUGH MATIN M/C GRD 6.3a ø1 1.6a ø2 0.4a ø3
SCALE 1:X

UNTOL DIMN mm

UP TO 6	6 30	30 120	120 300	300 600	600 1200	1200 2400	OVER 2400
±0.1	±0.2	±0.3	±0.4	±0.5	±0.8	±1.0	±1.5

THREAD END ALLOWS ABOVE LENGTH OUT OF HARDNESS TOLERANCE

CUSTR	HIWIN STD.	DATE	03.23.98
TITLE	BALL SCREW	DWG	JENNY
MATAL	CF53 HRC56-62	CHK	
		APPD	
DWG.NO.	A1063VA1	PROCESS NO.	E

HIWIN BALLSCREWS