A10JSCA1

591.82
425.96 | 40.64 | (125.22)
15 | 58 | 15 | 3.3 | 27.94 | 81.28 | 12.7
10 | 12
6 OIL HOLE
0.042 BB'
0.010 C'
0.100 AA'
0.022 C'
ø19.05x3.099/3.175W
19.05
1.5
1.5
B | B' | A | A' | C' | X | D | G
ø32
ø42.8 0/-0.1
ø42.85 0/-0.025
ø73
WIPER BOTH ENDS
ø29.2
ø26.162
ø20 -0.007/-0.015
ø15
ø15.875 -0.013/-0.020
6.1 +0.25/0
ø11.2
1/2"-20UNF
MD 12.667/12.461
PD 11.841/11.732

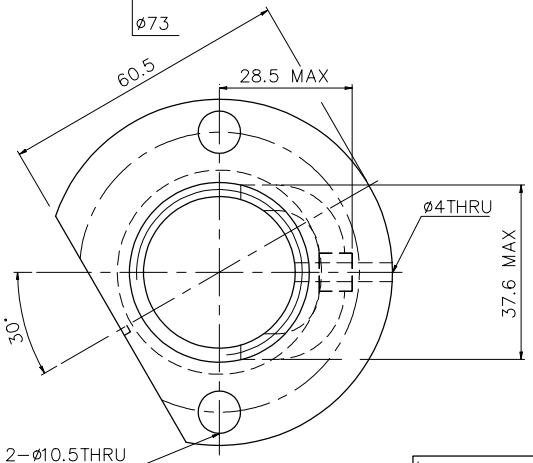

D-D VIEW

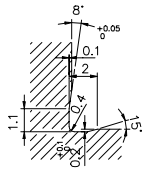

F0.4X0.2DIN509

X DETAIL

1.MAX AXIAL LOAD: _____kgf
2.MAX BALLSCREW ROTATIONAL SPEED: _____rpm
DN VALUE: _____
ACCELERATION=____m/sec²
3.MAX FEED RATE: _____m/min

PRELOAD(kgf)	113
R.D	29.124
S.F (kgf)	0.04~1.36
DRAG TORQUE(kgf-cm)	0.10~4.00
LUBRICATION	———
DIRECTION OF TURN	L.H
PC DIA.	32.4
BALL DIA.	3.175
BACKLASH	0
CIRCUIT	2.5*2
LEAD ANGLE	2.86°
DYNAMIC (kgf)	1702
STATIC (kgf)	5098
LEAD	5.08

SPEC: L32-5.08B2-FSV-425.96-591.82-0.05

G

THREAD LENGTH

E300: 0.05

UNCHAMFERED USE ☐R0.5 ☐R1 ☐R

ROUGH M/C	FIN M/C	GRD
25a	6.3a	0.4a

SCALE 1:X

UNTOL DIMN mm

UP TO 6	6 30	30 120	120 300	300 600	600 1200	1200 2400	OVER 2400
±0.1	±0.2	±0.3	±0.4	±0.5	±0.8	±1.0	±1.5

HIWIN® BALLSCREWS

MATAL	SH: CF53	DATE	11.29.'01
	NT: SNCM220	DWG	巫興馨
THREAD BALL TRACK HRC 56 ~ 62		APPD	
		PROCESS NO.	G E
CUSTR	HIWIN STD.		
DWG.NO.	A10JSCA1		

*BREAK SHARP EDGE UNLESS OTHER SPECIFIED.
*未畫倒角者以R0.5MAX
THREAD END ALLOWS ABOVE LENGTH OUT OF HARDNESS TOLERANCE

CUSTOMER DRAWING NO.
MC TYPE
AXIAL TYPE

DATE	MODIFICATION	APPROVED

* PLEASE IGNORE CHINESE CHARACTERS WHICH ARE FOR OUR REFERENCE ONLY.