A10JSDA1

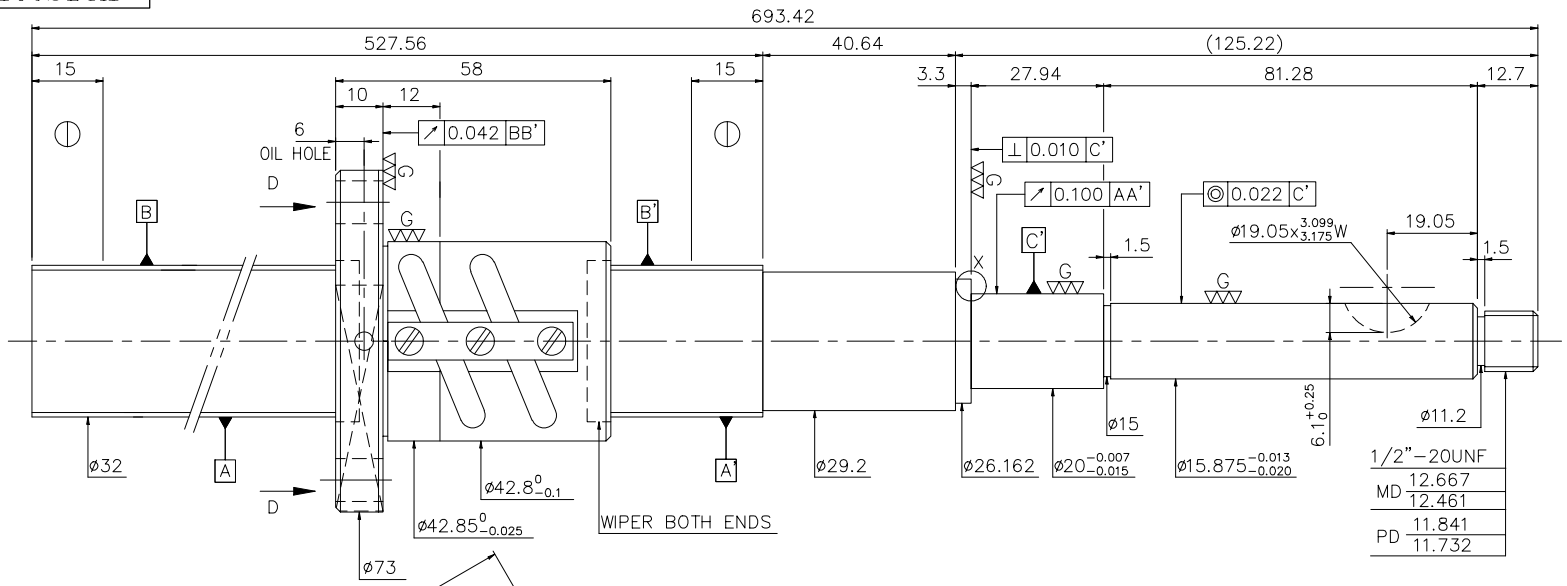


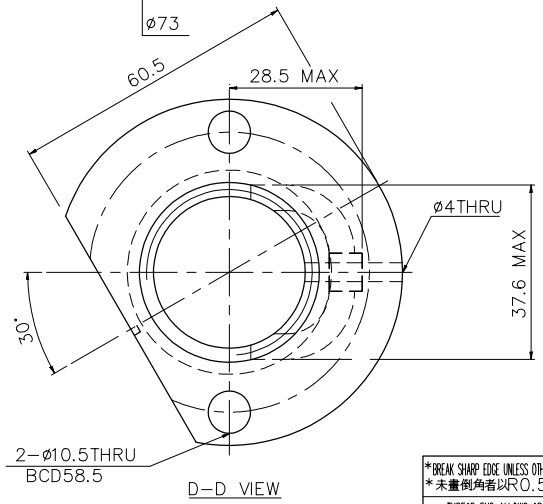


D-D VIEW

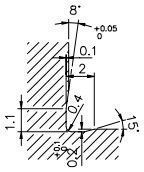


F0.4X0.2DIN509

X DETAIL

1.MAX AXIAL LOAD: _____kgf
2.MAX BALLSCREW ROTATIONAL SPEED: _____rpm
DN VALUE: _____
ACCELERATION=____m/sec²
3.MAX FEED RATE: _____m/min

| | |
|---|---|
| PRELOAD(kgf) | 113 |
| R.D | 29.124 |
| S.F (kgf) | 0.04~1.36 |
| DRAG TORQUE(kgf-cm) | 0.10~4.00 |
| LUBRICATION | ——— |
| DIRECTION OF TURN | L.H |
| PC DIA. | 32.4 |
| BALL DIA. | 3.175 |
| BACKLASH | 0 |
| CIRCUIT | 2.5*2 |
| LEAD ANGLE | 2.86° |
| DYNAMIC (kgf) | 1702 |
| STATIC (kgf) | 5098 |
| LEAD | 5.08 |

SPEC: L32-5.08B2-FSV-527.56-693.42-0.05

| | | | |
|---|---|---|---|
| MATAL | SH: CF53 | DATE | 11.29.'01 |
| | NT: SNCM220 | DWG | 巫興馨 |
| THREAD BALL TRACK HRC 56 ~ 62 | | APPD | |
| | | PROCESS NO. | G E |
| CUSTR | HIWIN STD. | | |
| DWG.NO. | A10JSDA1 | | |

UNCHAMFERED USE ☐R0.5 ☐R1 ☐R

| ROUGH M/C | FIN M/C | GRD | SCALE |
|---|---|---|---|
| 25a | 6.3a | 0.4a | 1:X |

UNTOL DIMN mm

| UP TO 6 | 6 30 | 30 120 | 120 300 | 300 600 | 600 1200 | 1200 2400 | OVER 2400 |
|---|---|---|---|---|---|---|---|
| ±0.1 | ±0.2 | ±0.3 | ±0.4 | ±0.5 | ±0.8 | ±1.0 | ±1.5 |

THREAD LENGTH

E300: 0.05

HIWIN® BALLSCREWS

*BREAK SHARP EDGE UNLESS OTHER SPECIFIED.
*未畫倒角者以R0.5MAX

THREAD END ALLOWS ABOVE LENGTH OUT OF HARDNESS TOLERANCE

CUSTOMER DRAWING NO.
MC TYPE
AXIAL TYPE

| DATE | MODIFICATION | APPROVED |
|---|---|---|
| | | |
| | | |

* PLEASE IGNORE CHINESE CHARACTERS WHICH ARE FOR OUR REFERENCE ONLY.