A10JSIA1

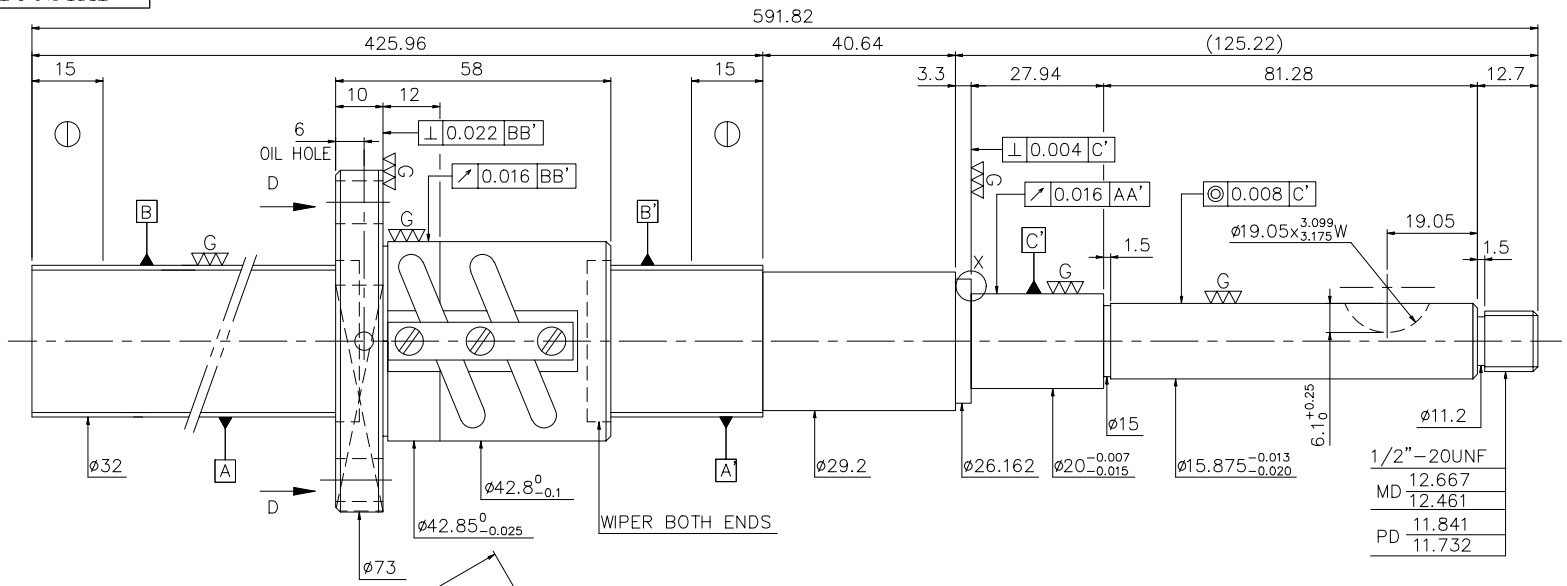

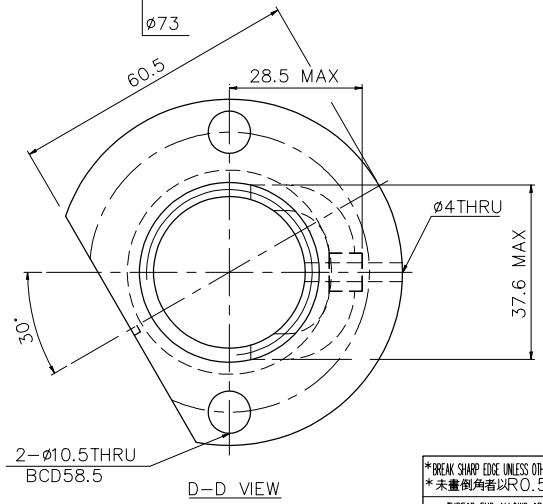

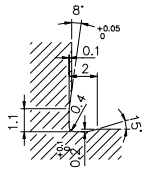

1.MAX AXIAL LOAD: _____kgf
2.MAX BALLSCREW ROTATIONAL SPEED: _____rpm
DN VALUE: _____
ACCELERATION=____m/sec^2
3.MAX FEED RATE: _____m/min

PRELOAD(kgf)	207
R.D	29.324
S.F (kgf)	0.65~1.92
DRAG TORQUE(kgf-cm)	1.88~5.64
LUBRICATION	_____
DIRECTION OF TURN	L.H
PC DIA.	32.6
BALL DIA.	3.175
BACKLASH	0
CIRCUIT	2.5*2
LEAD ANGLE	2.84°
DYNAMIC (kgf)	1886
STATIC (kgf)	5666
LEAD	5.08

SPEC: L32-5.08B2-FSV-425.96-591.82-0.012

MATAL	SH: 50CrMo4	DATE	11.29.'01
	NT: SNCM220	DWG	巫蘭馨
THREAD BALL TRACK HRC 58 ~ 62		APPD	
		PROCESS NO.	G E
CUSTR	HIWIN STD.		
DWG.NO.	A10JSIA1		

THREAD LENGTH: T: -0.013 e300: 0.012 E: 0.015 e: 0.013

UNCHAMFERED USE ☐R0.5 ☐R1 ☐R
ROUGH M/C 25a FIN M/C 6.3a GRD 0.4a
SCALE 1: X

UNTOL DIMN mm

UP TO 6	6 30	30 120	120 300	300 600	600 1200	1200 2400	OVER 2400
±0.1	±0.2	±0.3	±0.4	±0.5	±0.8	±1.0	±1.5

HIWIN® BALLSCREWS

*BREAK SHARP EDGE UNLESS OTHER SPECIFIED.
*未畫倒角者以R0.5MAX
THREAD END ALLOWS ABOVE LENGTH OUT OF HARDNESS TOLERANCE

CUSTOMER DRAWING NO.
MC TYPE
AXIAL TYPE

DATE	MODIFICATION	APPROVED

* PLEASE IGNORE CHINESE CHARACTERS WHICH ARE FOR OUR REFERENCE ONLY.