A114INB4

Released by HIWIN design group.

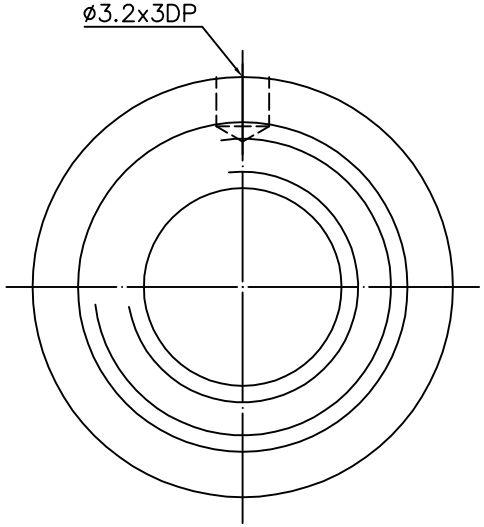

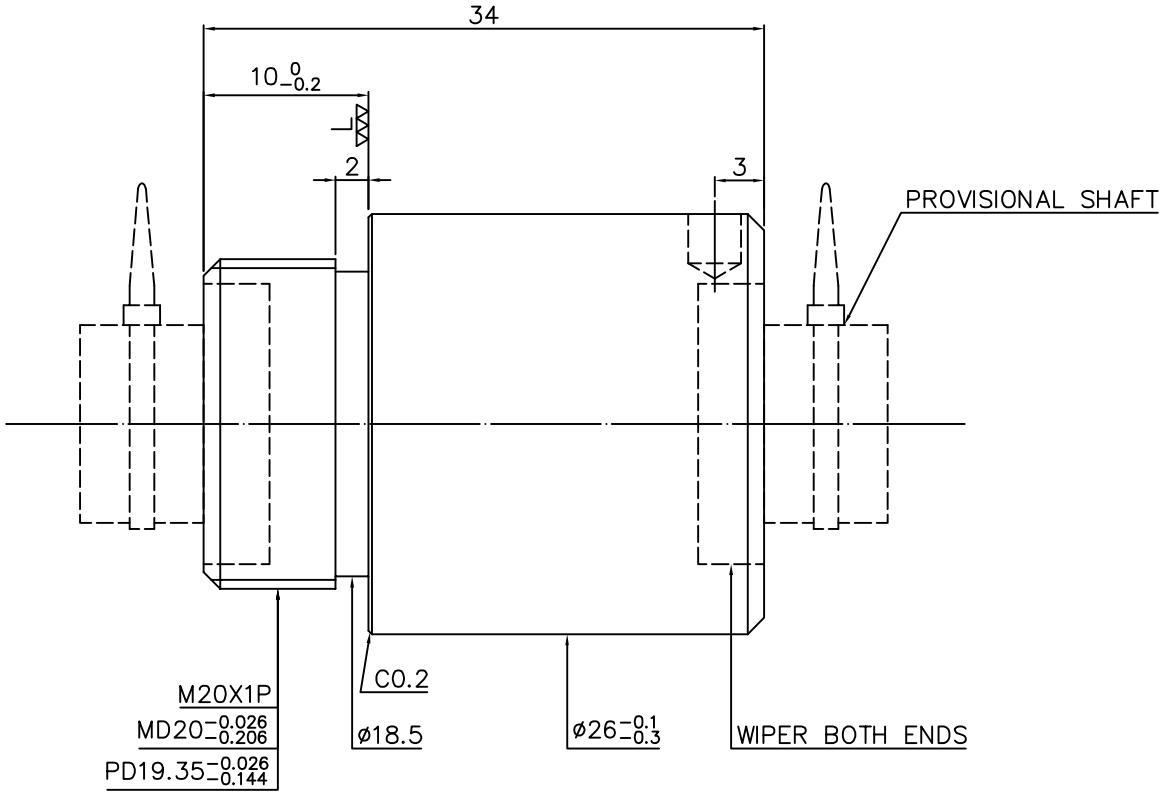

NOTE: 1. Steel ball tolerance must be in the range of −0.0025, −0.015

2. L : Precision Turning

SPEC: R12−5T3−RSI

MAX. AXIAL LOAD (kgf)		LUBRCATION		PRELOAD (kgf)	~
MAX. ROTATIONAL SPEED (rpm)		SPACE BALL		R.D	~
DN VALUE		E1 TYPE ASSEMBLY METHOD		S.F (kgf)	
MAX. FEED RATE (m/min)		CUSTOMER DRAWING NO.		DRAG TORQUE (kgf-cm)	
ACCELERATION (m/sec²)		CUSTOMER MC TYPE		DIRECTION OF TURN	R
SUPPORT METHOD		CUSTOMER AXIAL TYPE		PC DIA.	12.01
				BALL DIA.	2
				BACKLASH 1	0.03MAX
				CIRCUIT	3
				LEAD ANGLE	7.55
				DYNAMIC (kgf)	265
				STATIC (kgf)	461
				LEAD	5

THREAD LENGTH

E300: ~

UNCHAMFERED USE ■R0.5 □R1 □R

ROUGH M/C	FIN M/C	GRD
25a	6.3a	0.4a

SCALE 1:X

UNTOL DIMN mm

UP TO 6	6 30	30 120	120 300	300 600	600 1200	1200 2400	OVER 2400
±0.1	±0.2	±0.3	±0.4	±0.5	±0.8	±1.0	±1.5

MATAL	SH: ROLLED	DATE	2007.07.16
	NT: SNCM220/SCM415	DWG	JANET
THREAD BALL TRACK HRC 56 ~ 62		APPD	Michelle
		PROCESS NO.	G
CUSTR	H−CHICAGO		
DWG.NO.	A114INB4		

HIWIN® BALLSCREWS

*BREAK SHARP EDGE UNLESS OTHER SPECIFIED.
*未畫倒角者以R0.5MAX

THREAD END ALLOWS ABOVE LENGTH OUT OF HARDNESS TOLERANCE

DATE	MODIFICATION	APPROVED
2007.07.16	MOD. 1	Michelle

x

* PLEASE IGNORE CHINESE CHARACTERS WHICH ARE FOR OUR REFERENCE ONLY.